Feb.1.2026 Copyright 2026 HIROSE ELECTRIC CO., LTD. All Rights Reserved.
In case of consideration for using Automotive equipment / device which demand high reliability, kindly contact our sales window correspondents.

	COUNT	DESCRIPTION OF REVISIONS	BY	CHKD	DATE		COUNT	DESCRIPTION OF REVISIONS	BY	CHKD	DATE
△						△					
△						△					
△						△					

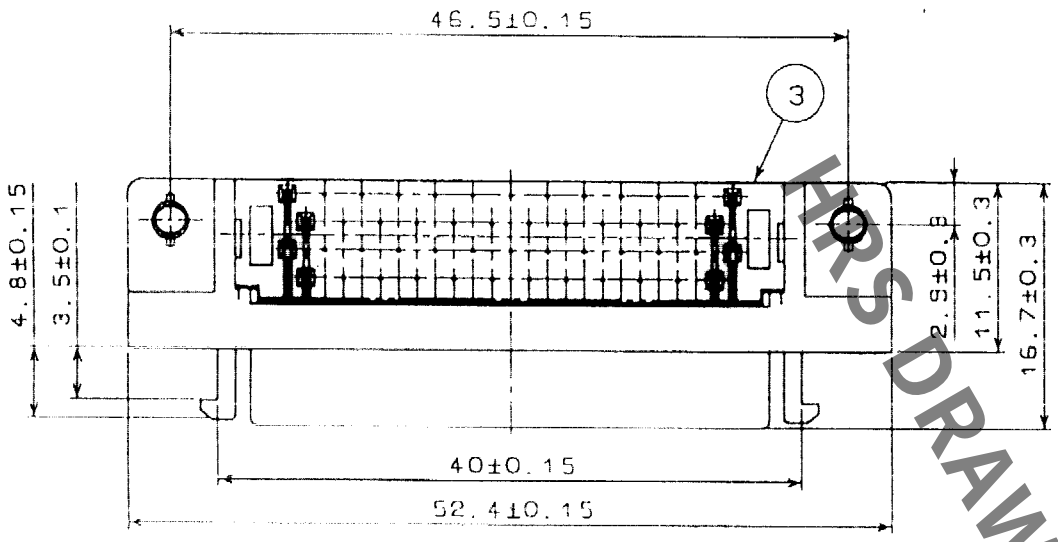

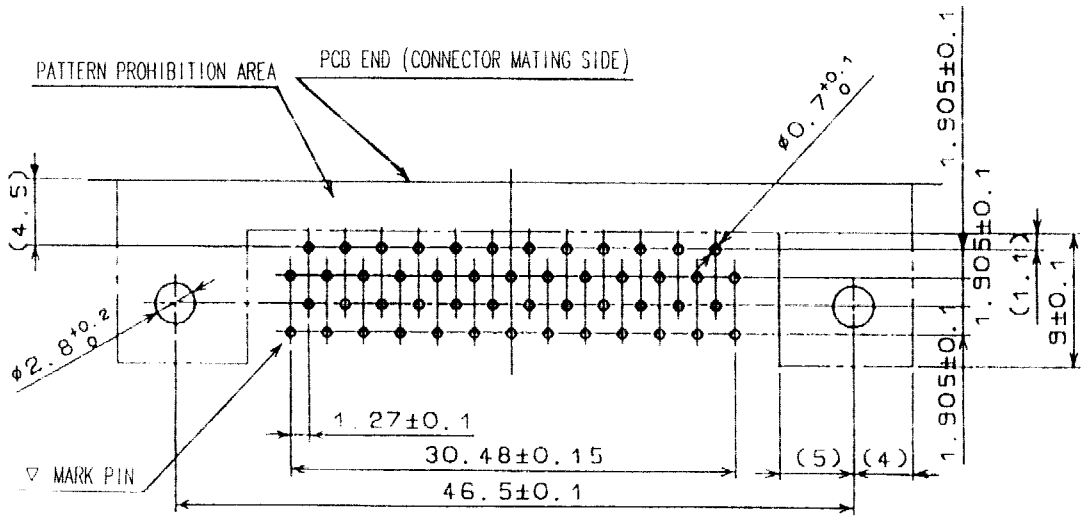

RECOMMENDED PC BOARD PATTERN
(RECOMMENDED BOARD THICKNESS 1.6 mm)

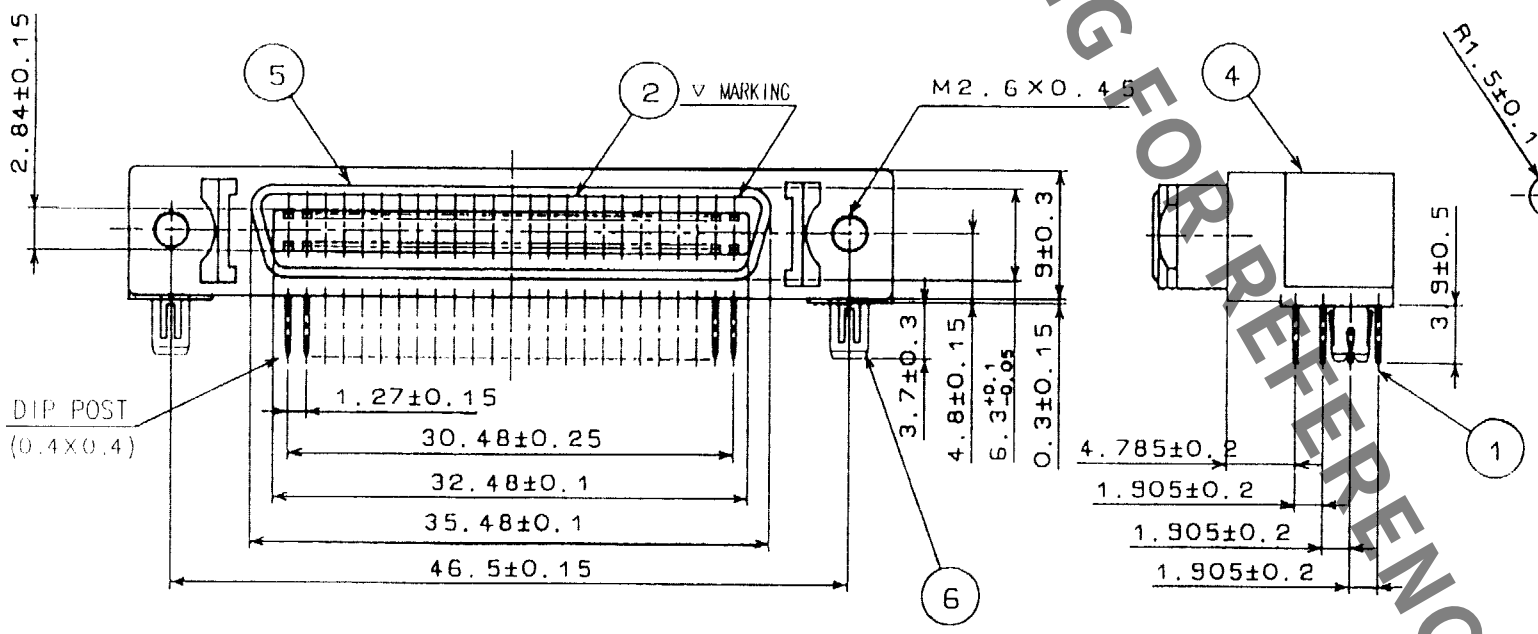

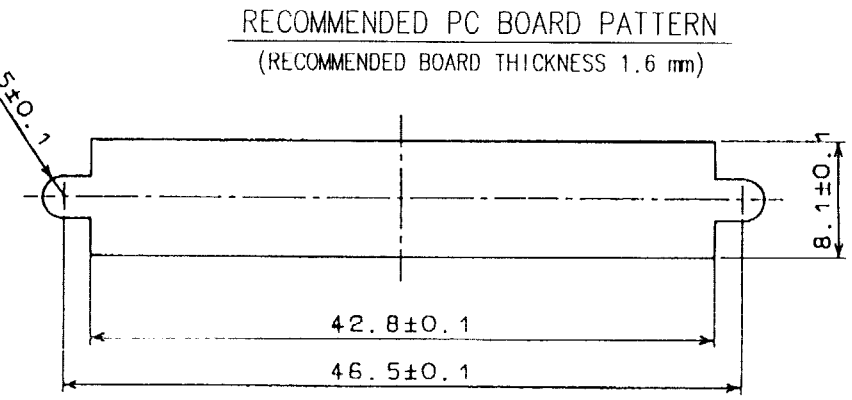

PANEL CUTOUT
(PANEL THICKNESS TO BE 1.6 mm MAX)

FOR REFERENCE

NO.	MATERIAL	FINISH, REMARKS	NO.	MATERIAL	FINISH, REMARKS
3	PBT	UL94V-0(BLACK)	6	PHOSPHOR BRONZE	TIN PLATING
2	PBT	UL94V-0(BLACK)	5	STEEL	NICKEL PLATING
1	PHOSPHOR BRONZE	SELECTIVE GOLD PLATING 0.3μm	4	ZINC ALLOY DIE CASTING	NICKEL PLATING

CODE NO.(OLD)	DRAWN	DESIGNED	CHECKED	APPROVED	RELEASED
CL	T. Kawaguchi 03.10.15	T. Kawaguchi 03.10.15	Y. Enami 03.10.16	H. Miura 03.10.16	. .

SCALE 2 : 1	DRAWING NO. EDC3-042068-01	PART NO. DX10M-50SE(50)
UNITS mm	HRS HIROSE ELECTRIC CO., LTD	CODE NO. CL230-5070-1-50 1/1

TO Q

FORM NO.229